Drawing Number	V131064	Rev	D

ITEM No.	DESCRIPTION	No. OFF
1	DN80 PN16 ANGLE PATTERN STOP/NR VALVE	1
2	DN32 PN16 SSHL SAFETY VALVE (BOP:7.70 BAR.G)	1
3	DN25 PN40 MANUAL BLOWDOWN VALVE (VB503)	1
4	DN25 PN16 FEED ISOLATING VALVE (VA527)	1
5	DN25 700mbar FEED NON-RETURN VALVE (VN064)	1
6	350 CRS WATER GAUGE ASSEMBLY (VW406, VW407, VC254)	1
7	PRESSURE GAUGE COCK/TEST CONN. (VC060)	1
8	150mm DIAL PRESSURE GAUGE (0-16 BARG) (CG007)	1

ITEM No.	DESCRIPTION	No. OFF
9	LEVEL ELECTRODE - MOD VALVE CONTROL & HIGH WATER	1
10	LEVEL ELECTRODE - 1st LOW WATER	1
11	LEVEL ELECTRODE - 2nd LOW WATER	1
12	420 x 320 MANHOLE	1
13		
14	MUDHOLE	2
15	LIFTING LUGS	2
16	CASING DRAIN CONNECTIONS (PLUGGED)	2
17		
18	CONTROL PANEL (1200H x 800W x 300D)	1
19	TWO WAY PRESSURE SWITCH BLOCK (CS090)	1
20	S TYPE SYPHON (CG100)	1

ITEM No.	DESCRIPTION	No. OFF
21	PRESSURE LIMITER SWITCH (1 - 16 BARG) (CS093)	1
22	PRESSURE SWITCH (BURNER CONTROL) (CS097)	1
23	PRESSURE TRANSMITTER ADAPTOR BLOCK (CS096)	1
24	C.C. ACCESS DOOR	1
25	OBSERVATION PORT	1
26	INSTRUMENT CONNECTION (PLUGGED)	2
27	REAR HEAT SHIELDS (SET)	1
28	FRONT HEAT SHIELDS (SET)	1
29		
30	FEED WATER PUMP (SEE TABLE FOR DETAILS)	1
31	DN40 PN16 WATER STRAINER (SUPPLIED LOOSE) (VS106)	1
32	NATURAL GAS/DISTILLATE OIL BURNER	1

ITEM No.	DESCRIPTION	No. OFF
33		
34	DN32 FEED PUMP 300mbar NON RETURN VALVE (VN075)	1
35		
36	TDS CONDUCTIVITY CONTROLLER	1
37	1/2" BSP SENSOR CHAMBER c/w ELECTRODE	1
38	1/2" BSP TDS ISOLATING VALVE	1
39	1/2" BSP TDS BLOWDOWN VALVE	1
40	1/2" BSP TDS NON RETURN VALVE	1
41	DN25 PN40 INTERMITTANT BLOWDOWN VALVE	1
42	SAMPLE COOLER C/W VALVES (CS217)	1
43	WELD INSPECTION PANELS (SET)	1
44	B.S. LADDER & PLATFORM c/w SAFETY GATE	1

ITEM No.	DESCRIPTION	No. OFF
45	ECONOMISER	1
46	ECONOMISER OUTLET HOOD	1
47	DN20 PN40 ECONOMISER SAFETY VALVE (BOP 24 BARG)	1
48	1/2" BSP ECON. DRAIN VALVE (BL313)	1
49	1/2" BSP ECON. VENT VALVE (BL313)	1
50	1/2" BSP ECONOMISER AUTO BLEED VALVE (VE060)	1
51	1/2" BSP ECON. BLEED VALVE ISOLATING VALVE (BL313)	1
52	100 DIA FEED OUTLET TEMPERATURE GAUGE (BL290)	1
53		
54	DN25 PN25 MODULATING CONTROL VALVE	1
57	AUTO BLEED VALVE PNEUMATIC SILENCER, (VE062)	1
58A	O2 TRIM	1
58B	PLL52 O2 TRIM MODULE	1
62	PUMP VSD PRESSURE TRANSMITTER (CS100)	1

BOILER EVAPORATION		MINIMUM INSIDE DIAMETER CHIMNEY
2000 KG/HR	4009 LB/HR	305mm

WORKING PRESSURE	TYPE OF PUMPS	ORIFICE
6.00barg (87.03 lbs/in²)	1 OFF CR3-19 c/w 1.5kW MOTOR	DIA
ELECTRICAL SUPPLY CONTROL VOLTAGE	415V, 50Hz, 3PH 230V	N/A

TERMINATION DETAILS

REF	BORE OR CONNECTION	FLANGE DIA	FLANGE RATING	TERMINATION REF.
A	80	200	BS EN1092-1 PN16	STEAM OUTLET
B	50	150	BS EN1092-1 PN16	SAFETY VALVE OUTLET
C	25	115	BS EN1092-1 PN40	BOILER BLOWDOWN
D	32	140	BS EN1092-1 PN25	FEED WATER INLET
E	3/8"BSP			INSP. TEST POINT
F				
G	8 O/D			WATER GAUGE DRAIN
H	3/4" BSP			REAR CASING DRAIN
J				
K	8 O/D			SAFETY VALVE DRAIN
L	3/4"BSP			INSTRUMENT CONNECTIONS
M	2" BSP			GAS INLET
N	3/4" BSP			OIL INLET/ RETURN FLEXIBLE HOSES
P	1/2"BSP			S.C. COOLING WATER
Q	1/2"BSP			TDS BLOWDOWN CONN
R	32	140	BS EN1092-1 PN16	ECON. SAFETY VALVE
S	8 O/D			ECON. SAFETY VALVE DRAIN
T	1/2"BSP			AUTO BLEED CONNECTION
U	1/2"BSP			ECONOMISER VENT
V	1/2"BSP			ECONOMISER DRAIN

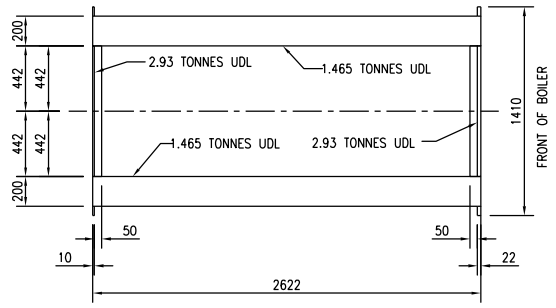

FOUNDATION DETAIL

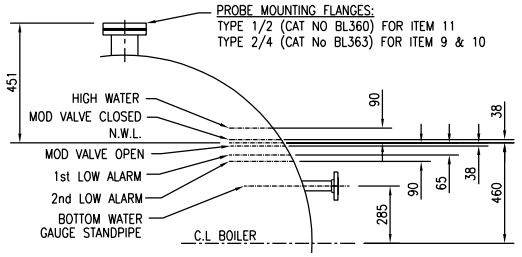

BOILER WORKING LEVELS

WATER LEVEL PROBE & SLEEVE INFORMATION:

HIGH WATER - PROBE NRG26-21 = 361mm LG (PROBE UNCUT)
MOD VALVE CLOSED - PROBE NRG26-21 = 413mm LG (PROBE UNCUT)
MOD VALVE OPEN - PROBE NRG26-21 = 489mm LG (PROBE UNCUT)
1st LOW WATER - PROBE NRG16-50 = 516mm LG (PROBE CUT TO LENGTH)
2nd LOW WATER - PROBE NRG16-50 = 541mm LG (PROBE CUT TO LENGTH)

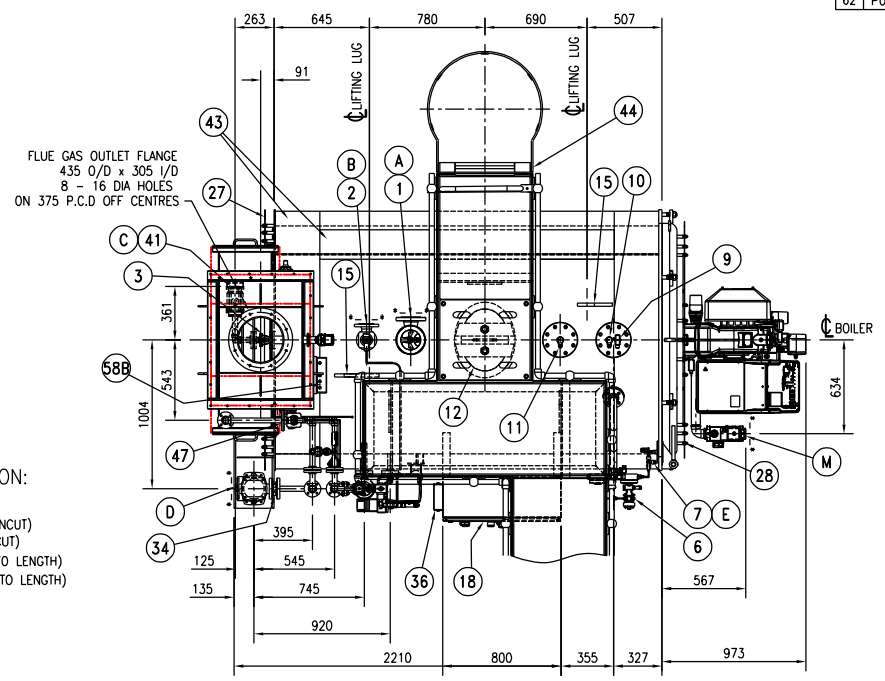

PLAN VIEW

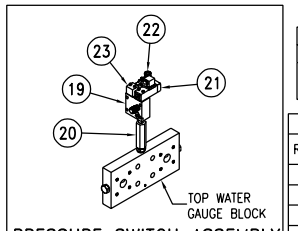

PRESSURE SWITCH ASSEMBLY

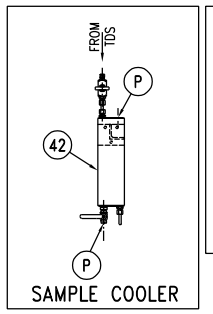

SAMPLE COOLER

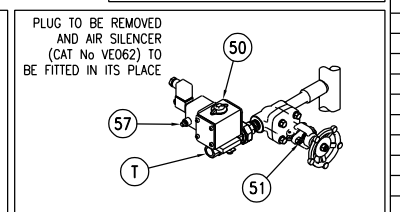

AUTO BLEED ASSEMBLY
(ORIENTATION OF ITEMS MAY DIFFER TO ACTUAL ASSEMBLY)

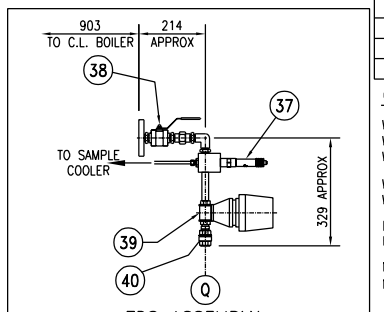

TDS ASSEMBLY
(ORIENTATION OF ITEMS MAY DIFFER TO ACTUAL ASSEMBLY)

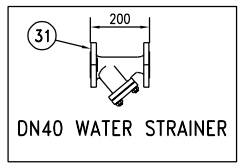

DN40 WATER STRAINER

GENERAL NOTES:

WEIGHT OF BOILER EMPTY COMPLETE (INCL. ECONOMISER & HOOD).....5.71 TONNES.
WEIGHT OF BOILER WITH WATER TO NWL (INCL. ECONOMISER & HOOD)....8.20 TONNES.
WEIGHT OF BOILER FULL OF WATER (INCL. ECONOMISER & HOOD).....8.79 TONNES.

WEIGHT OF ECONOMISER + HOOD (EMPTY).....0.480 TONNES.
WEIGHT OF ECONOMISER + HOOD (FULL OF WATER) .....0.498 TONNES.

DESIGN PRESSURE .....11.00 barg 159.54 lbs/in²
HYDROSTATIC TEST PRESSURE .....17.74 barg 257.30 lbs/in²

MINIMUM TRANSPORT HEIGHT 2065mm
MINIMUM TRANSPORT WIDTH 2019mm

ALL FLANGES TO BS EN1092-1 UNLESS OTHERWISE STATED
- - REPRESENTS COCHRAN LTD TERMINAL POINTS

SAFETY VALVE ESCAPE PIPEWORK:-

THE DISCHARGE PIPEWORK MUST NOT BE SMALLER IN DIAMETER THAN THE VALVE OUTLET. DISCHARGE PIPEWORK MUST BE SIZED IN SUCH A WAY THAT BUILT-UP BACK PRESSURE DOES NOT EXCEED 10% OF THE SET PRESSURE OF THE VALVE. INSTALLATION & MAINTENANCE INSTRUCTIONS SHOULD BE CONSULTED PRIOR TO INSTALLATION. IF A RISE IN DISCHARGE PIPEWORK CANNOT BE AVOIDED THEN A SMALL BORE DRAIN SHOULD BE PROVIDED AT THE LOWEST POINT WHERE WATER COULD COLLECT.

**NB: CLEARANCE FOR ECONOMISER TUBE WITHDRAWL IS REQUIRED ONLY ON ONE SIDE OF THE BOILER ONLY.

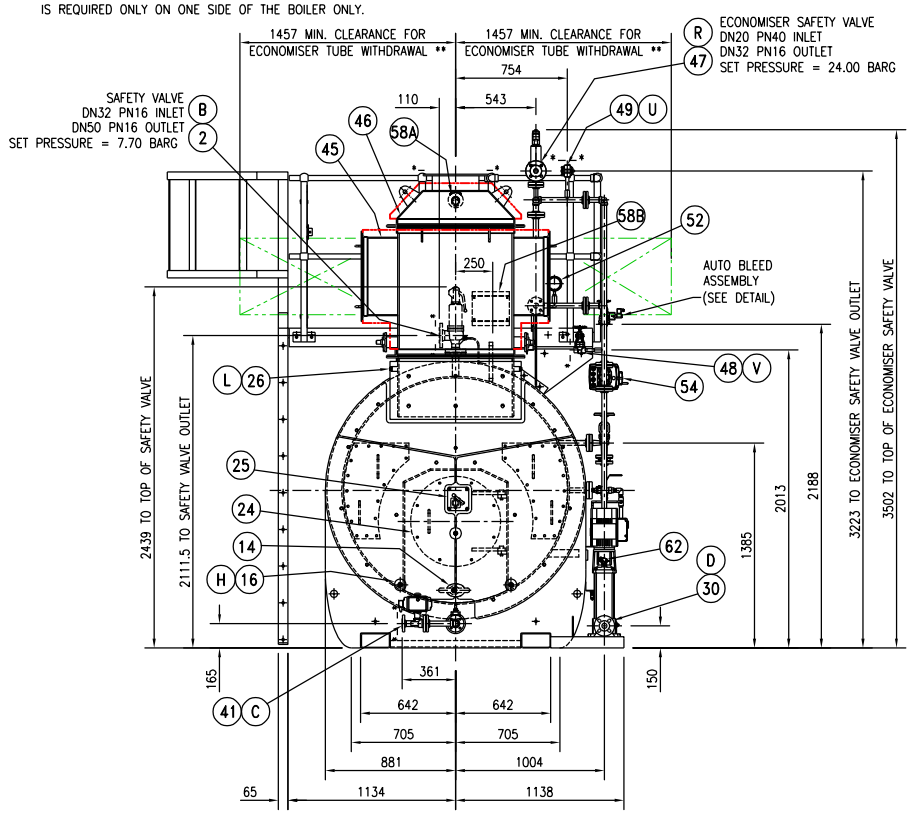

REAR ELEVATION

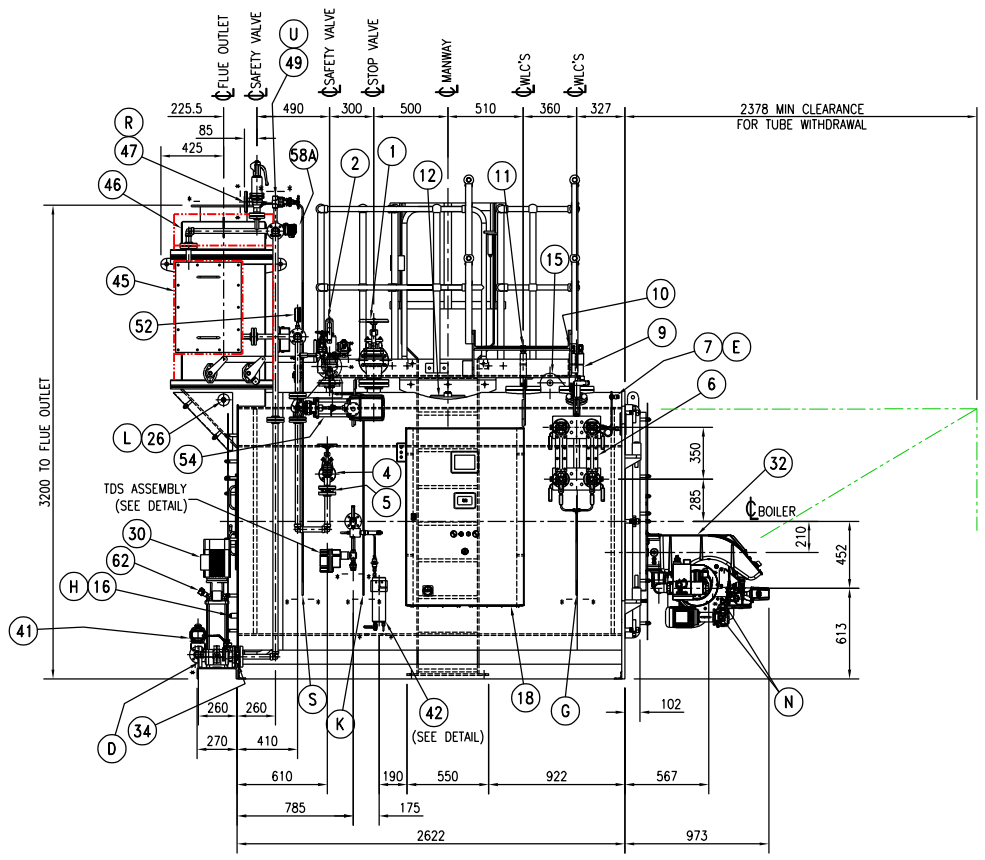

SIDE ELEVATION

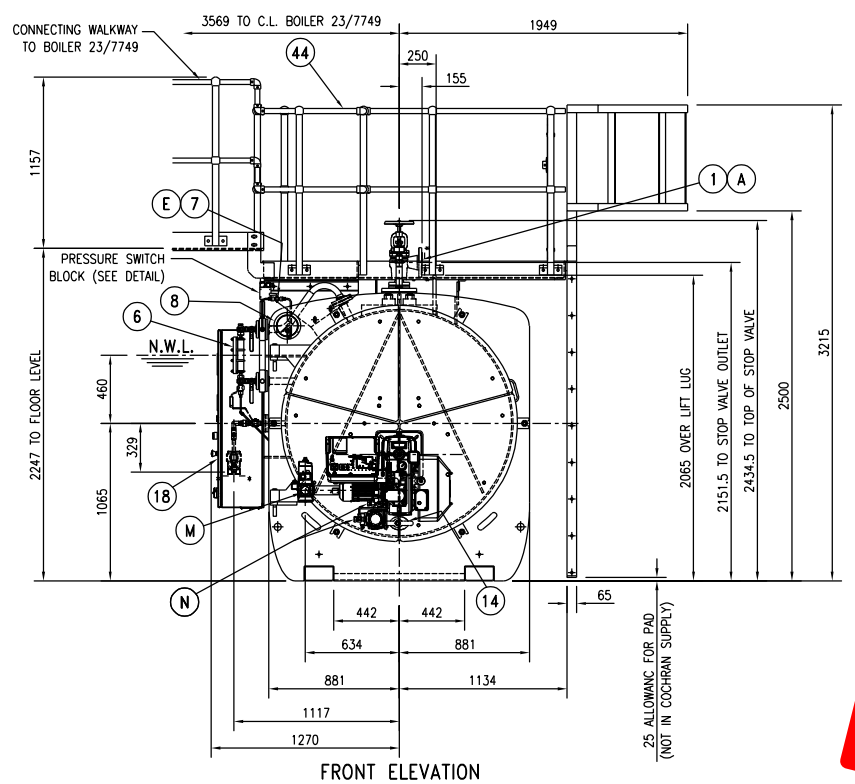

FRONT ELEVATION

THIS DRAWING CANCELS & SUPERSEDES REVISION C

D	BOILER SAFETY VALVE SET PRESSURE WAS 7.50 BARG.	B	BLOWDOWN PIPEWORK AMENDED
INT PJW, DATE 17/11/20, CHKD KD		INT PJW, DATE 19/10/20, CHKD KD	
C	WALKWAY SECTION ADDED TO PLATFORM	A	1st Issue
INT PJW, DATE 29/10/20, CHKD KD		DATE 08/10/20	

Copyright © 2020 by Cochran Ltd. All rights reserved. This drawing must not be used, copied, reproduced or disclosed to a third party without the written consent of Cochran Ltd.

Main Office: Newbie Works, Annan, Dumfries & Galloway, DG12 5QU, Scotland
Tel: +44(0)1461 202111 Fax: +44(0)1461 200255
Email: engineering@cochran.co.uk
cochran.co.uk
Also at: 1st Floor, 105 Sadler Road, Doddington Road, Lincoln, LN6 3RS, England.
Tel: +44(0)1522 510510

Registration No. 001

GENERAL NOTES:
ALL DIMENSIONS SUBJECT TO MANUFACTURING TOLERANCES.
TOLERANCE ON UNLIMITED FABRICATION DIMENSIONS IS ±5mm.
REMOVE ALL BURRS AND SHARP EDGES.
SURFACE FINISH ACCEPTED AS CAST, FORGED, WELDED, FLAME CUT, ETC UNLESS OTHERWISE STATED.
MACHINED SURFACES DENOTED BY: ✓
WHERE A PARTICULAR FINISH IS REQUIRED MAXIMUM ROUGHNESS IS INDICATED THUS: 3.2✓

DRAWN	P.WILKINSON	08/10/20
CHECKED	K.DOUGLAS	08/10/20
ISSUED		
SCALE 1:25	DO NOT SCALE IF IN DOUBT ASK	
DIMENSIONS IN mm UNLESS OTHERWISE STATED		

COCHRAN

A1

Title: BOILER GENERAL ARRANGEMENT 2000 KG/HR ST23

Used On: 23/7750

Drawing Number: V131064 SHT 2 OF 2 Rev D